BFF Design Ltd – BLDRV-12/24 Card Data Sheet – R1.4

WARNING – The BLDRV-12/24 contains exposed heat sinks that may become hot to the touch when the card is in operation. Do not fully enclose the card in an unventilated enclosure and do not handle the card when it is powered and in use.

1. Introduction

The BFF BLDRV-12/24 is a single channel brushless motor driver intended for use in force feedback controls for simulators using BFF CL Software (beta v9.66 or later). See section 8 for a typical system arrangement, and section 9 for "potentiometer-less" system operation. The card generates sinusoidal commutation voltages for 3 phase brushless motors with quadrature encoder shaft position feedback. Its nominal current rating is 6 Amps continuous, 12 Amp intermittent peak. It can operate with 12 or 24V DC supplies. Hall-effect sensor output is required from the BLDC motor , this is required to allow the card to calibrate the encoder position.

The BLDRV-12/24 updates force output at 500Hz, it receives controlling input from the BFF CL Software at approx 50Hz.

IMPORTANT – The onboard PICAXE 20X2 controller must be correctly programmed for the brushless motor to be used with the card. The programming sets the motor pole count, encoder sensor position calibration etc. Programs are available for the MB082 & MB057 Speedermotion BLDC motors recommended for use in the CL system.

2. Features

- Space Vector Modulation generating sinusoidal commutation voltages at 10KHz PWM for smooth torque output from matched 3 phase brushless motors.

- +/- 9bit force output resolution.
- 500Hz update rate for onboard force calculations, approx 50Hz update rate for PC software data input.
- 12 or 24V DC input voltage operation (see notes and 3.C below).
- Re-programmable for encoder cpr, encoder/hall sensor position calibration, motor poles, input demand scaling and vibration effect scaling.
- Daisy-chaining on common serial data line to allow use on single USB connection.

3. Connections and Settings

IMPORTANT – POWER SUPPLY PROVISION

The BLDRV-12/24 cards will operate on either 12V or 24V power supplies (see below for details of settings). It is strongly recommended that Lead-Acid batteries or the suggested power supply is used for DIY systems; these will provide a very smooth current source. If a PSU is to be used it MUST be a smooth, voltage regulated supply capable of sustaining the supply voltage at the demanded current draws – variation of the supply voltage above the data sheet specifications will damage the cards, and any electrical noise on the supply will be felt as roughness in the force feedback at the controls.

As an alternative to Lead Acid batteries a suggested PSU is **Mean Well S-350-24**. This is a 24V 14.6 Amp power supply suitable for 2 motor systems – the current supply is a bit low for 3 cards at rated output.

See - http://www.meanwell.com/search/s-350/s-350-spec.pdf

DO NOT IGNORE THESE REQUIREMENTS.

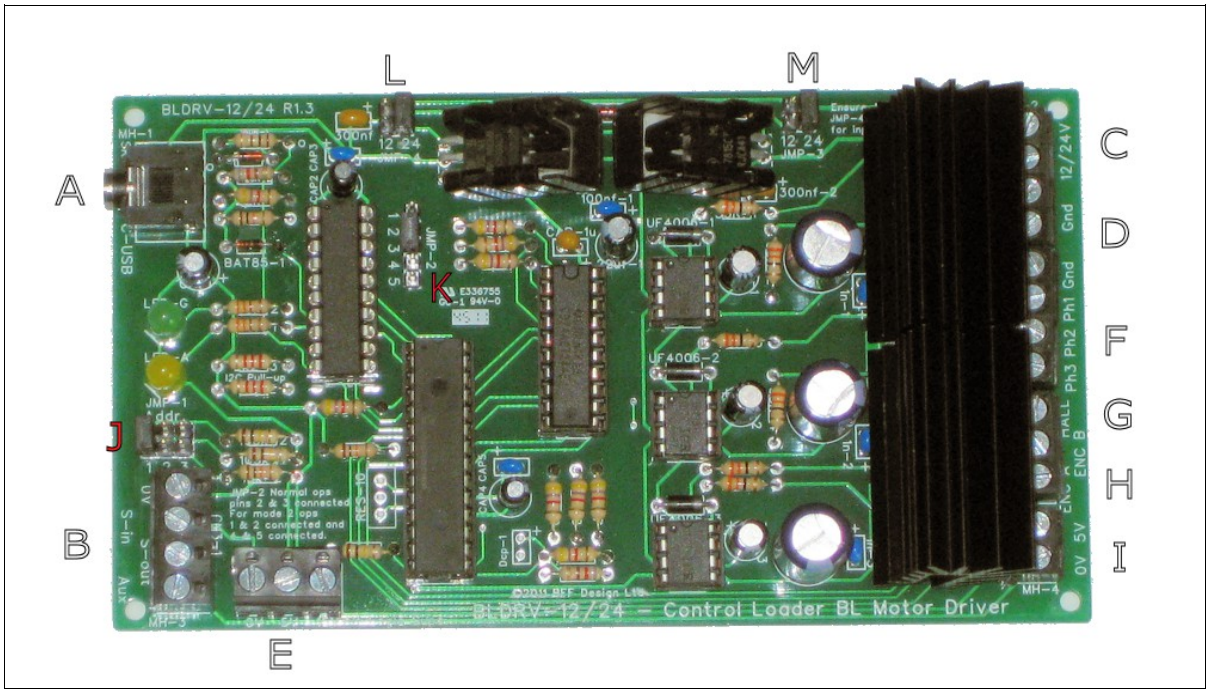

CONNECTIONS - Refer to photo above-

A) Stereo jack socket for PC connection. You MUST use either a PICAXE AXE027 USB download cable or an equivalent FTDI chip based USB/Serial cable. To achieve satisfactory comms speed adjust the “Latency Timing” of the virtual COM port installed by the cable driver to 1ms in the port's advanced settings. The USB download cable connects to a USB port to communicate through a “virtual” serial port installed by the cable drivers – these drivers should be provided with your AXE027 cable or downloaded from the PICAXE web site.

B) CN3-1 – Serial data send & receive lines, S-in and S-out. These are pass-through connections for the serial data lines from socket A – use these to daisy-chain other BLDRV-12/24 cards on the same USB cable connection. To do this connect together the S-in's on the cards, repeat for the S-outs. The 0V terminal is for general use – do not loop to other BLDRV-12/24's otherwise ground loop problems may arise.

Daisy chained cards must be located close to each other in order to keep the length of the daisy chain wiring short (typically less than 200mm). Use shielded low voltage signal cable (eg USB or similar) for the serial data daisy chain wiring.

Aux – 5V High/Low digital output to indicate when loading is active (high). This can be used to drive a “loading indicator” LED. The LED MUST be connected via a serial resistor (330R) to limit current flow to less than 10mA, or use an LED with built-in series resistor.

C) 12V or 24V DC input. Two terminals to allow pass-through to daisy-chained drivers. For 12V operation the actual supply voltage should be between 11V and 14V **at all times**. For 24V operation the supply voltage should be between 22V and 27V **at all times**. Lead acid batteries are recommended – they provide smooth DC current and have the ability to sink current.

NOTE the card is NOT reverse polarity protected – ENSURE CORRECT SUPPLY POLARITY.

The power supply must have adequate current capacity to control voltage drop when high currents are drawn by the mosfets. This is particularly important for 12V systems because the MOSFET gate voltage is taken directly from the 12V supply when the card is in 12V mode. The MINIMUM acceptable supply voltage under load is 11V.

CARE should be taken that jumpers JMP-3 (M) and JMP-4 (L) are BOTH correctly set for the selected input voltage BEFORE power is applied.

The supply current requirement is approximately 6 Amps per card. However this depends on the details of the motors, gearing and settings used for the system. MB082 motors with 24V supply and ½ scale 20X2 programming (default) will draw approximately 6 Amps each at stall. Continuous load at this current draw will cause the heat sinks on the BLDRV-12/24 card to become hot to the touch, and the supply will need to be capable of delivering this current for each card simultaneously held on load. Under normal flying conditions sustained control loading is not present (the controls are trimmed and in balance) so simultaneous peak loading on each card would be unusual. The system builder should assess actual current draw and ensure the power supply is adequate.

<u>ENSURE you use power cabling of adequate gauge for the card maximum operating currents. AWG 12 is suggested.</u>

See section 4 below on Cooling necessary if sustained current loading is expected to occur.

D) Power supply ground.

Suitable grounding of the cards is very important. The main return line to the power supply ground MUST be of suitable gauge and must not offer significant resistance to the return flow of current from the cards to the power supply. The power supply ground and the PICAXE cable digital ground are connected in the card and if the power-end ground level is allowed to move as a result of inadequate wiring then this may affect the operation of the cards.

See power wiring and grounding diagram in Section 10.

The main return cable to the power supply should at least be 12AWG (4mm^2) or or ideally 10AWG (6mm^2). The D connectors will accept 12AWG (4mm^2) directly – so use short length12AWG connecting lengths between each card and the main 10 AWG return cable to the power supply.

Daisy chaining of the return lines across the D connectors might be satisfactory in most applications but is not recommended.

PLEASE NOTE: Suitable grounding of the motor cases and mechanically connected structure is also important to minimise electrical noise effects. These should be grounded directly to the power supply ground and NOT via the ground connections on the driver card.

E) CN3-3 Alternative 5 & 15V logic supply INPUT. The 5V logic circuit supply and/or the 15V mosfet gate driver supply can be separated from the main power supply on the cards. If these inputs are to be used then jumpers JMP-3 (15V) and JMP-4 (5V) MUST be removed. On/Off switching of the inputs should be approximately simultaneous. The voltage supplies MUST be regulated.

F) BLDC Motor 1, 2 & 3 phase connections. For MB082 & MB057 Speedermotion BLDC motors Phase 1 is Black (T), 2 is Red (R) and 3 is White (S). For other BLDC motor makes the correct phase connections must be

determined experimentally.

G) Single Hall-effect position sensor input. For MB082 Speedermotion BLDC motor this should be Yellow (Hall A), for the MB057 motor use Yellow (Hall C). For other BLDC motor makes the correct hall sensor connection must be determined experimentally. The single hall sensor channel is used for absolute position calibration of the motor quadrature encoder at start-up. The absolute electrical angle for calibration is defined in the on board PICAXE 20X programming and can be altered by re-programming the microcontroller.

H) Quadrature encoder A and B channel connections. The encoder used must be capable of operation with a 5V supply. PLEASE refer to your encoder technical documentation to identify the A & B channels. Note that it may be necessary on testing to reverse the A & B connections if motor cogging is observed on first loading.

I) 0 & 5V logic supply output for the hall sensors and quadrature encoder.

J) Jumper JMP-1, Address setting for the driver. The jumper should be set to position 1 for Elevator drive, 2 for Aileron drive and 3 for Rudder drive.

K) JMP-2 operation mode setting. 5 Pin Jumper JMP-2 is used to set the “operating” OR “programming” mode of the BLDRV-12/24 card. For normal operation pins 2 and 3 of JMP-2 must be connected. To re-program the on-board 20X2 microcontroller pins 1 and 2 should be connected and pins 4 and 5 connected. To re-flash the chip you will need the Programming Editor software available free from the PICAXE web site, and a .BAS program for the chip. THIS IS FOR ADVANCED USERS ONLY. BEFORE any attempt is made to re-flash the 20X2 microcontroller the BLDRV-12/24 card MUST be powered-down and the adjacent 28pin dsPIC driver chip carefully removed from its socket to disable the mosfet drives. Power must be removed from any other BLDRV-12/24 cards daisy-chained to the serial lines.

   See Appendix 1 for detailed procedure.

L) JMP-4 voltage setting for input to the on-board 5V logic supply regulator. Set to 12V or 24V as required to match the card power supply voltage.

   MAKE SURE this setting is correct for the supply voltage BEFORE applying power to the card. Damage will result if JMP-4 is set to 24V when JMP-3 is set to 12V and power is connected.

   With the 12V setting the regulator input is taken directly from the 12V card supply. With the 24V setting the regulator input is taken from the output from the on-board 15V regulator.

M) JMP-3 voltage setting for mosfet gate supply. Set to 12V or 24V as required to match the card power supply voltage.

   MAKE SURE this setting is correct for the supply voltage BEFORE applying power to the card.

   With the 12V setting the FET gate supply is taken directly from the card power supply. With the 24V setting the gate supply is taken from the output from the on-board 15V regulator. 24V operation will be more robust if the power supply to the board suffers voltage drop when higher currents are drawn. If 12V operation is to be used then ensure the power supply is cable of maintaining at least 11V at the higher end current draws.

4. Cooling

MB082 motors with 24V supply and ½ scale 20X2 programming (default) will draw approximately 6 Amps each at stall. This current level will cause the heat sinks on the BLDRV-12/24 card to become hot to the touch if this loading is held for a period of minutes. Under normal flying conditions sustained control loading is not present (the controls are trimmed and in balance) so such loading tends to be sustained only for the duration of the flight manoeuvre before being released. Under these normal-use conditions of intermittent loading it is likely that the cards will not require additional cooling.

If non-standard flight conditions are expected, for example sustained flight under simulated systems failure modes, then loading on the controls and cards may be seen at high levels for sustained periods – long enough to cause heating problems for the mosfets. If such use is anticipated it is **strongly recommended** that additional forced air cooling is provided for the cards. PC case type fans mounted directly above the card heatsinks can be effective in cooling the heat sinks.

5. Setup

PLEASE READ CAREFULLY THE PROJECT OVERVIEW DOCUMENTATION PROVIDED ON THE WEB SITE – THIS PROVIDES MORE COMPLETE AND DETAILED INFORMATION ON THE SETUP AND COMMISSIONING OF THE OVERALL SYSTEM.

The default programming of the cards is for use with SpeederMotion MB082GA210 brushless motors with 360cpr quadrature encoders. These are 8-pole BLDC motors requiring four electrical commutation cycles per shaft revolution. With the 360 cpr encoders fitted there is one encoder edge transition per one degree of electrical rotation giving 0.25 degree resolution for shaft physical position reporting.

If different motors are to be used then the on board PICAXE 20X2 programming will require to be modified to suit their pole count, encoder resolution and hall sensor position calibration. Input demand scaling can also be altered through the 20X2 programming.

Wire the driver cards in accordance with the wiring diagram shown in Section 8 or 9. For motors other than the MB082GA210 the correct phase and hall-sensor wiring may require to be determined experimentally. Please contact me if you wish to do this.

BEFORE power-up set JMP-3 and JMP-4 to match the system supply voltage (12V or 24V). Set JMP-1 to the correct channel address - position 1 for Elevator drive, 2 for Aileron drive and 3 for Rudder drive. Set JMP-2 for Mode 1- Normal Operation.

Note the cards will not initialise fully unless the system wiring, including the joystick card wiring is complete and operational, the Windows OS joystick calibration is complete and the BFF CL Software (beta v9.66 or later) is setup and running. Cards with dsPIC firmware v35 and 20X2 firmware v28 or later can be operated in “potentiometer-less” mode. In this mode joystick card potentiometers are NOT required on the main control axes and power-up calibration can be completed without active joystick card data for the main control axes.

To configure cards for “potentiometer-less” operation please refer to the BFF Driver Test application and its user documentation. An overview of “potentiometer-less” configuration of the CL system can be found here.

6. Operation

PLEASE READ CAREFULLY THE PROJECT OVERVIEW DOCUMENTATION PROVIDED ON THE WEB SITE – THIS PROVIDES MORE COMPLETE AND DETAILED INFORMATION ON THE SETUP AND COMMISSIONING OF THE OVERALL SYSTEM.

Before use make sure the joystick card is operational and your flight controls are properly calibrated through the normal PC game controller calibration facilities on the PC. The BFF CL Software (beta v9.66 or later) will need to be operational and running and set to RELEASE for the cards to initialise properly. If “potentiometer-less” operation is configured game-controller potentiometer position data is NOT required on the main control axes for the cards to initialise.

In order to control the brushless motors the BLDRV-12/24 must first calibrate the absolute position of the shaft quadrature encoder against the motor's internal hall sensor and the PC joystick position. On power-up the LED's will flash an initialisation sequence. During this period the 20X2 master chip will setup the dsPIC driver chip which will suspend motor commutation until the quadrature encoder shaft position feedback has been calibrated. To do the calibration wait until the LED startup sequence has started and you see a STEADY FAST blinking of the YELLOW LED on the card. Then move the flight control at a steady pace backwards and forwards over its full operating range until you see the LED fast blinking stop.

(The movement will first induce an edge transition from the motor's internal hall-sensor to allow the shaft encoder position to be calibrated to the exact electrical rotation position of the motor shaft, and secondly allow the encoder position to be mapped to the joystick position as reported by the joystick card (note - this 2nd step does NOT occur for “potentiometer-less” configurations). Motor commutation will not become active until this calibration is complete. This should be done with the CL software setup and running and with the software set to RELEASE.)

After initilisation and calibration the yellow LED continuous flashing will stop and the green LED will blink per 30 received data updates. Intermittent Yellow LED flashes indicate time-outs on the serial data comms – if these are too frequent the force feel will be affected, if serial comms are lost the Yellow LED will stay on and the force response will be held at the last good input.

Flashing of both LEDs at 1 Hz indicates an error condition. To determine the error click “Ping” on the CL software to write the card status data to the BFF_PRY.log log file which can then be opened and inspected.

Cutting power to the driver cards will stop the motor drives.

WARNING – the voltage regulator and mosfet heat sinks on the BLDRV-12/24 card may become hot to touch. The regulators will become warm in use, particularly for 24V operation – this is normal. The mosfet heat sinks will heat with increased current flow to the motors – they will become hot if currents around the rated current (6 Amps) are sustained for several minutes. Normal FFB loading does not involve sustained high levels of force on the controls, so under normal operation the mosfets will warm slightly and not become hot. If excessive heatsink temperature is experienced without significant force output then there may be a fault with the wiring, motors or driver card – power down at once and inspect.

See also section 4 Cooling.

7. PICAXE 20X2 Control Chip Re-programming

See 3.K above for details of jumper settings to put the card into programming mode. See Appendix 1 for details of the firmware upgrade procedure.

Set up data concerning the motor pole count, encoder resolution, hall sensor position calibration and input force scaling can be altered by re-programming the 20X2 control chip.

If you wish to do this please contact me for information.

This facility allows the BLDRV-12/24 to be used with different brushless motor makes and encoder resolutions. Use of different motor makes may also require that the correct phase ordering, choice of hall sensor output and hall sensor to encoder calibration values be determined experimentally.

Input force scaling can be used to concentrate the force demand at the lower end of the available range provided by the card power supply voltage. This allows the full force demand resolution to be used over, for example, half of the output voltage range. The default card programming is for ½ range scaling – this means that additional force output will probably be available from the card if needed, however this may almost certainly require additional forced air cooling of the cards. See section 4.

The magnitude of vibration effects is limited by the programming in order to protect the drives. This amplitude scaling can be can be altered by adjusting the appropriate parameter in the 20X2 programming.

8. Typical System Wiring (with standard joystick card potentiometer position reporting).

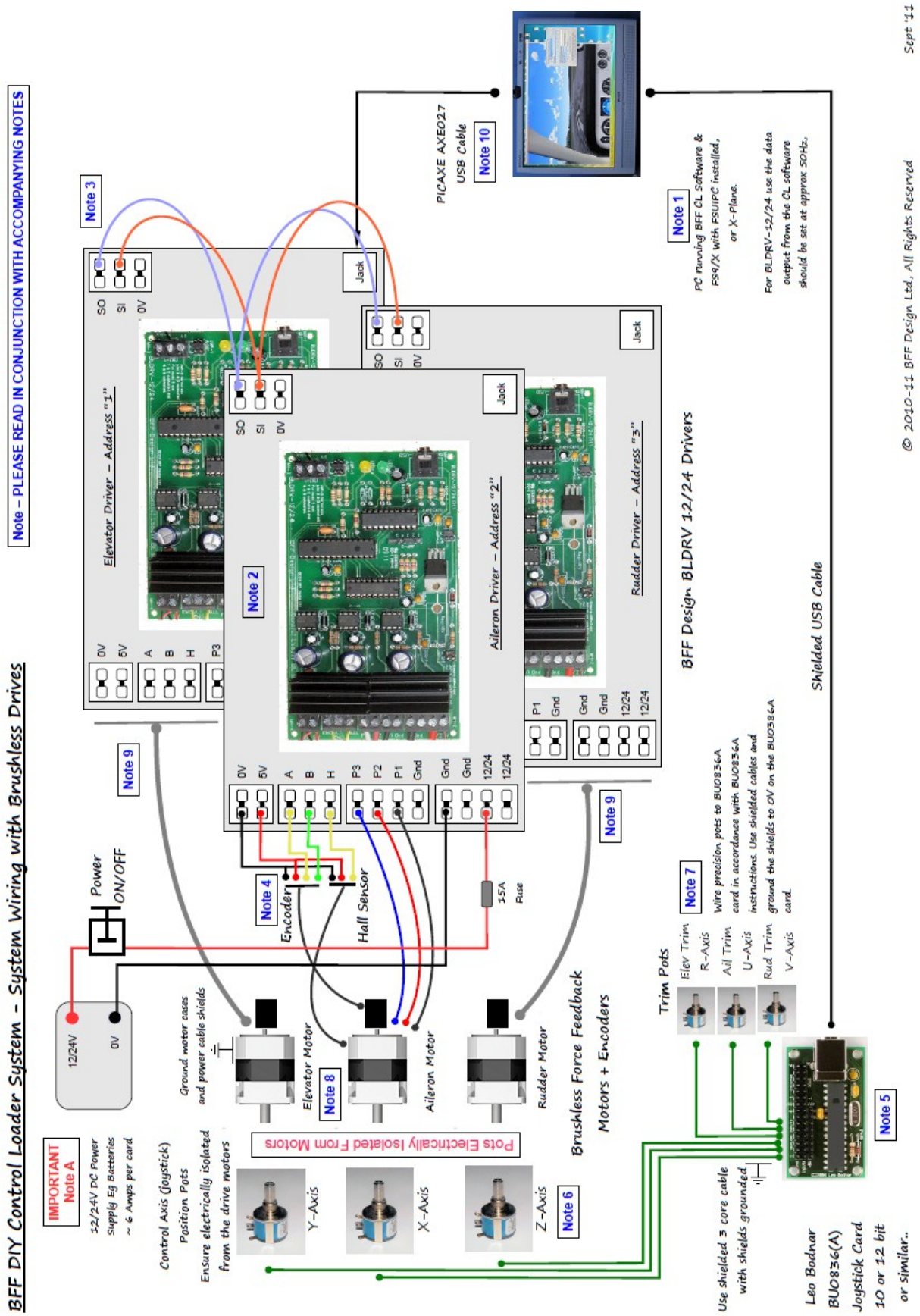

NOTES – BFF CL System – Brushless Wiring & Configuration (with joystick card potentiometer position reporting).

A) IMPORTANT – POWER SUPPLY PROVISION

The BLDRV-12/24 cards will operate on either 12V or 24V power supplies (see data sheet for details of settings). It is strongly recommended that Lead-Acid batteries are used for DIY systems; these will provide a very smooth current source and will be able to sink any current that is returned from the drivers. If a PSU is to be used it MUST be a smooth, voltage regulated supply capable of sustaining the supply voltage at the demanded current draws – variation of the supply voltage out with the data sheet requirements will damage the cards, and any electrical noise on the supply will be felt as roughness in the force feedback at the controls.

A suggested PSU is **Mean Well S-350-24**. This is a 24V 14.6 Amp power supply suitable for 2 motor systems – the current supply is a bit low for 3 cards at rated output.

See - http://www.meanwell.com/search/s-350/s-350-spec.pdf

DO NOT IGNORE THE ABOVE POWER SUPPLY REQUIREMENTS.

1. BFF Control Loader software and FS9/X with FSUIPC installed. The PC should be set to run the CL Software at or around 50Hz. The CL software can be moved to a LAN PC if the software is starved of CPU resource when it tries to run alongside FS9/X – however it is recommended that the software is run on the same PC as the sim if possible. The brushless BLDRV-12/24 drivers are programmed to do much of the force calculation on the card – this allows the CL software to run with less CPU resource than when setup for use with DC drives.

   The CL software will also operate with X-Plane V9.6+. XPUIPC needs to be installed – see CL Software user guide.

2. Three BLDRV-12/24 brushless motor drivers are used – one for each control axis. Each is addressed using jumper settings on the cards. The BLDRV-12/24 brushless motor drivers receive serial input via the AXE029 download cable at approx 500kbaud, the baud rate is set in the .cfg configuration file.

   The single serial data connection is shared by the brushless drivers – see note 3. The drivers process force demands from the PC software at a rate of approx 50Hz and the CL software should be set to export at this rate, the BLDRVR-12/24 internal force calculations are done at 500Hz. The data export frequency of the CL software is adjusted by altering the loop pause time in the Pry_S.cfg file. Force demands will be held if the BLDRV-12/24's detect loss of serial data comms from the PC.

3. The BLDR-12/24 drivers are daisy chained on the same serial lines. This allows operation from a single COM port on the PC. On-board terminal CN3-1 provides access to the serial lines for wiring. Each is addressed using jumper JMP-1 settings on the cards – 1 is for Elevator, 2 is Aileron and 3 is Rudder.

   Daisy chained cards must be located close to each other in order to keep the length of the daisy chain wiring short (typically less than 200mm). Use shielded low voltage signal cable (eg USB or similar) for the serial data daisy chain wiring.

   Dual PICAXE download cables can be used to allow one card to be located away from the others, or to improve serial comms with the cards in some circumstances. In this case the daisy chain extends only to the two cards on the same PICAXE cable; the remaining card is alone connected to the other cable. This option is enabled using the Line 68: Cable Channel Allocation setting in the background settings area of the CL Setup application.

4. Wiring details are shown for the Aileron drive only – the Elevator and Rudder wiring is the same to their respective drivers. All the drivers can be supplied from the same 12/24V DC power source so long as it has adequate current capacity. A pair of 38Ah lead-acid rechargeable batteries makes a good DC source capable of high current output and capable of sinking current when required.

   PLEASE NOTE the grounding requirements for the cards described in the data sheet section 3.D.

   The driver to motor wiring connects the 3 power phases, the quadrature encoder and one hall-effect position sensor to the driver. The hall sensor input is used to calibrate the absolute position for the quadrature encoder. The quadrature encoder provides the continuous motor shaft position feedback required for the motor

commutation.

5. Bodnar BU083(A) 10 or 12bit joystick card. 10 or 12bit resolution recommended for future compatibility with pilot/co-pilot motion following features. Other joystick cards can be used, however do not use poor (8bit) resolution cards.

   Note the joystick axis mappings to the control axes – Aileron – X, Elevator – Y, Rudder – Z, Elev Trim – R, Aileron Trim – U, Rudder Trim – V. Do not enable these trim axis assignments in FS9/X and do not use the FS9/X internal trim adjustments otherwise the sim and CL flight controls zero positions will not match.

   Trim pots on a separate joystick card can be used – settings are made in the Pry_S.cfg file. The joystick number and the axes letters to be used need to be specified.

   It is also possible to use trim up/down buttons as an alternative to pots. Again settings are made for this is the Pry_S.cfg file. The joystick number and the numbers of 6 up/down trim buttons (3 pairs of 2) on the joystick require to be specified. The rate at which the trim moves when a trim button is depressed can also be set.

   NOTE the BFF Driver Test application can be used to examine and identify the active output axes from your joystick card.

6. Precision potentiometers must be used for the control axis position reporting. They should be mechanically geared to ensure that as much of their electrical working range is employed as possible – this helps to maximise the resolution of the position reporting. The pots should be **electrically isolated** from the drive motors to prevent noise propagating to the position signals. The pots must be connected to the BU083(A) card using shielded (screened) cable and the cable shields should be grounded to 0V on the BU083(A) card. This will help to minimise the effects of RF radiation from the motors on the signal resolution.

7. The CL software implements trim forces separately from the FS9/X internal trim system. Three trim posts are required – connected as shown to the joystick board, or alternatively six (6) up/down trim buttons (2 for each control axis) can be used. See item 5 above for more details.

   NOTE: if more analogue outputs are connected on the BU083(A) card the physical location of the trim channels on the card may move. If you think this has happened the BFF Driver Test application can be used to examine and identify the active output axes from your joystick card.

8. Force feedback motors. Brushless DC motors with near sinusoidal back EMF characteristics of the type specified. Not all low cost BLDC motors will operate satisfactorily in a CL system – even with the BLDRV-12/24 drivers. Many have trapezoidal back-emf characteristics and can not generate smooth enough torque output.

   Ground the motor cases and connecting structure and power cable shielding to minimise electrical noise transmission effects. The case grounding should be direct to the power supply 0V connection and NOT via the ground connections on the BLDRV-12/24 cards.

   The motors should have 360cpr quadrature encoders fitted.

   The mechanical design of the motor to control drive is another critical area for the overall system performance, as is the mechanical connection of the position pots to the controls. Transmissions must be stiff and precise with low levels of friction and as little backlash as is possible.

9. The Elevator and Rudder axis wiring is the same as is shown for the Aileron. All three drivers can share the same power supply if it has adequate current capacity. PLEASE NOTE the grounding requirements for the cards described in the data sheet section 3.D.

10. To maintain smooth performance the BFF CL software needs to export the force demands to the BLDRV-12/24's at high baud rates. The default baud is 516129 to match the baud of the BLDRV-12/24 default programming. This is a non-standard baud but it is supported by FTDI chip based USB/Serial cables and so also the PICAXE AXE027 cable. To obtain best results at this baud the “Latency Timer” setting in the advanced options for the virtual com port associated with your cable should be reduced from 16 to 1 ms. Do this through the control panel – device manager on the PC.

9. Typical System Wiring (with “potentiometer-less” position reporting – available on cards with dsPIC firmware v35 and 20X2 v28 or later)

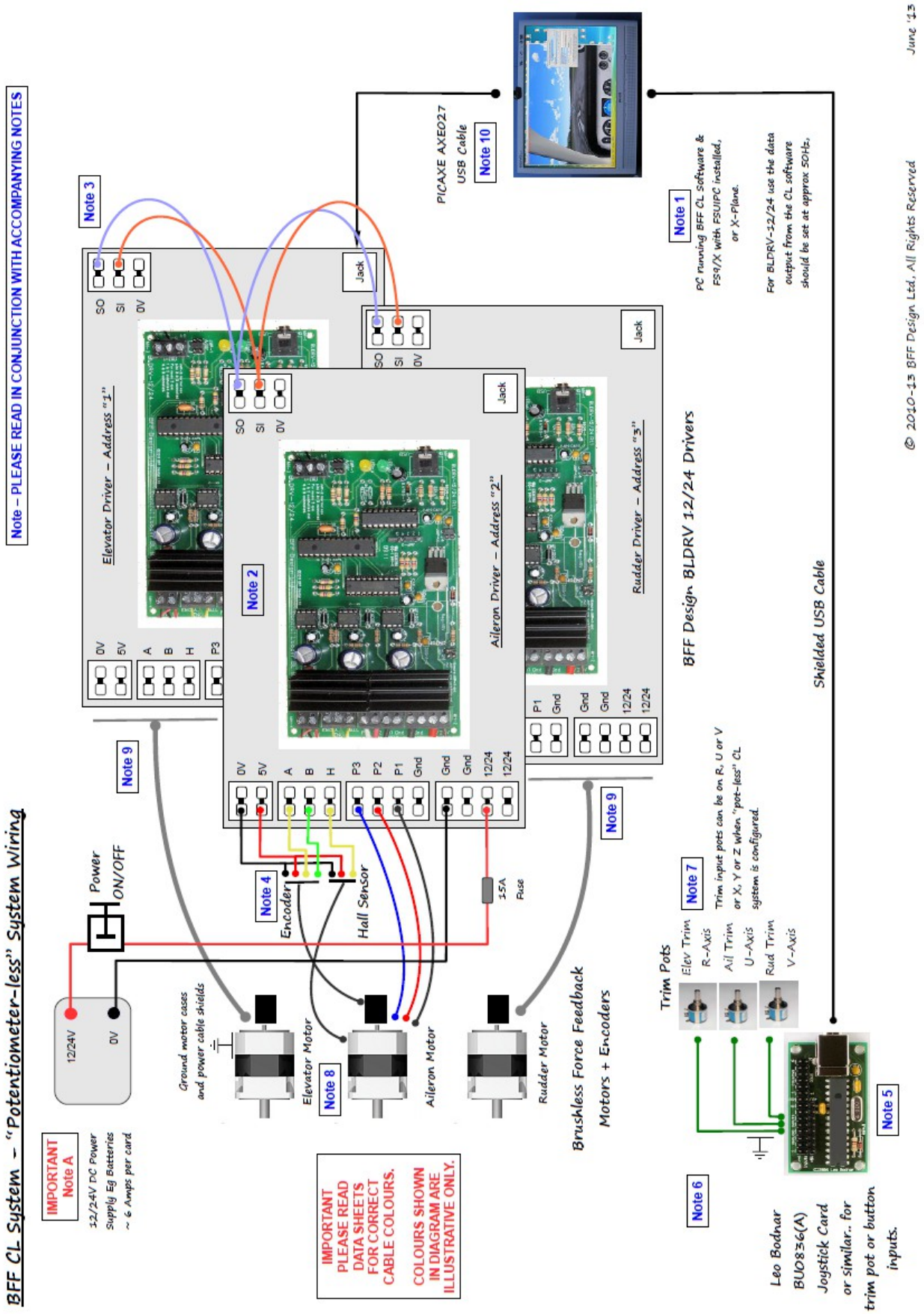

NOTES – BFF CL System – Brushless Wiring & Configuration (“potentiometer-less” operation).

A) IMPORTANT – POWER SUPPLY PROVISION

The BLDRV-12/24 cards will operate on either 12V or 24V power supplies (see data sheet for details of settings). It is strongly recommended that Lead-Acid batteries are used for DIY systems; these will provide a very smooth current source and will be able to sink any current that is returned from the drivers. If a PSU is to be used it MUST be a smooth, voltage regulated supply capable of sustaining the supply voltage at the demanded current draws – variation of the supply voltage out with the data sheet requirements will damage the cards, and any electrical noise on the supply will be felt as roughness in the force feedback at the controls.

A suggested PSU is **Mean Well S-350-24**. This is a 24V 14.6 Amp power supply suitable for 2 motor systems – the current supply is a bit low for 3 cards at rated output.

See - http://www.meanwell.com/search/s-350/s-350-spec.pdf

DO NOT IGNORE THE ABOVE POWER SUPPLY REQUIREMENTS.

1. BFF Control Loader software and FS9/X with FSUIPC installed. The system should be set to run the CL Software at or around 50Hz (see the delay parameter in the Pry_S.cfg file). The CL software should be run on the same PC as the flight sim; this is to allow it access to the joysticks used for the sim and to issue instructions to the sim during its AP following operation. The brushless BLDRV-12/24 drivers are programmed to do much of the force calculation on the card – this allows the CL software to run with less CPU resource than for earlier beat versions.

   The CL software will also operate with X-Plane V9.6+. XPUIPC needs to be installed and a custom XPUUIPCS offsets file installed – see CL Software user guide.

2. Three BLDRV-12/24 brushless motor drivers are used – one for each control axis. Each is addressed using jumper settings on the cards. The BLDRV-12/24 brushless motor drivers receive serial input via the AXE029 download cable at approx 500kbaud, the baud rate is set in the .cfg configuration file.

   The single serial data connection is shared by the brushless drivers – however also see note 3 regarding dual serial cables.

   The drivers process force demands from the PC software at a rate of approx 50Hz and the CL software should be set to export at this rate, the BLDRVR-12/24 internal force calculations are done at 500Hz. The data export frequency of the CL software is adjusted by altering the loop pause time in the Pry_S.cfg file. Force demands will be held if the BLDRV-12/24's detect loss of serial data comms from the PC.

3. The BLDR-12/24 drivers are daisy chained on the same serial lines. This allows operation from a single COM port on the PC. On-board terminal CN3-1 provides access to the serial lines for wiring. Each is addressed using jumper JMP-1 settings on the cards – 1 is for Elevator, 2 is Aileron and 3 is Rudder.

   Daisy chained cards must be located close to each other in order to keep the length of the daisy chain wiring short (typically less than 200mm). Use shielded low voltage signal cable (eg USB or similar) for the serial data daisy chain wiring.

   Dual PICAXE download cables can be used to allow one card to be located away from the others, or to improve serial comms with the cards in some circumstances. In this case the daisy chain extends only to the two cards on the same PICAXE cable; the remaining card is alone connected to the other cable. This option is enabled using the Line 68: Cable Channel Allocation setting in the background settings area of the CL Setup application.

4. Wiring details are shown for the Aileron drive only – the Elevator and Rudder wiring is the same to their respective drivers. All the drivers can be supplied from the same 12/24V DC power source so long as it has adequate current capacity. A pair of 38Ah lead-acid rechargeable batteries makes a good DC source capable of high current output and capable of sinking current when required.

   PLEASE NOTE the grounding requirements for the cards described in the data sheet section 3.D.

   The driver to motor wiring connects the 3 power phases, the quadrature encoder and one hall-effect position

sensor to the driver. The hall sensor input is used to calibrate the absolute position for the quadrature encoder. The quadrature encoder provides the continuous motor shaft position feedback required for the motor commutation.

5. For “potentiometer-less” system operation position feedback via a joystick card is NOT required for the main control axes. The control positions are instead derived from the motor encoders and sent to the flight sim via FSUIPC.

   However a joystick card will be required for trim inputs – either via pots or buttons.

   The default trim pot assignments are: Elev Trim – R, Aileron Trim – U, Rudder Trim – V. However in the “pot-less” set up axes X, Y or Z can also be used. The joystick number and the axes letters to be used are specified in the Pry_S.cfg file (via the Setup application).

   Do not enable these trim axis assignments in FS9/X and do not use the FS9/X internal trim adjustments otherwise the sim and CL flight controls zero positions will not match.

   It is also possible to use trim up/down buttons as an alternative to pots. Again settings are made for this is the Pry_S.cfg file. The joystick number and the numbers of 6 up/down trim buttons on the joystick require to be specified. The rate at which the trim moves when a trim button is depressed can also be set.

   NOTE the BFF Driver Test application can be used to examine and identify the active output axes from your joystick card.

6. For “potentiometer-less” system operation position feedback via a joystick card is NOT required for the main control axes.

7. The CL software implements trim forces separately from the FS9/X internal trim system. Three trim posts are required – connected as shown to the joystick board, or alternatively six (6) up/down trim buttons (2 for each control axis) can be used. See item 5 above for more details.

   NOTE: if more analogue outputs are connected on the BU083(A) card the physical location of the trim channels on the card may move. If you think this has happened the BFF Driver Test application can be used to examine and identify the active output axes from your joystick card.

8. Force feedback motors. Brushless DC motors with near sinusoidal back EMF characteristics of the type specified. Not all low cost BLDC motors will operate satisfactorily in a CL system – even with the BLDRV-12/24 drivers. Many have trapezoidal back-emf characteristics and can not generate smooth enough torque output.

   Ground the motor cases and connecting structure and power cable shielding to minimise electrical noise transmission effects. The case grounding should be direct to the power supply 0V connection and NOT via the ground connections on the BLDRV-12/24 cards.

   The motors should have 360cpr quadrature encoders fitted.

   The mechanical design of the motor to control drive is another critical area for the overall system performance, as is the mechanical connection of the position pots to the controls. Transmissions must be stiff and precise with low levels of friction and as little backlash as is possible.

9. The Elevator and Rudder axis wiring is the same as is shown for the Aileron. All three drivers can share the same power supply if it has adequate current capacity.

10. To maintain smooth performance the BFF CL software needs to export the force demands to the BLDRV-12/24's at high baud rates. The default baud is 516129 to match the baud of the BLDRV-12/24 default programming. This is a non-standard baud but it is supported by FTDI chip based USB/Serial cables and so also the PICAXE AXE027 cable. To obtain best results at this baud the “Latency Timer” setting in the advanced options for the virtual com port associated with your cable(s) should be reduced from 16 to 1 ms. Do this through the control panel – device manager on the PC.

10. Typical System Power Wiring and Grounding Arrangements for 2 card system.

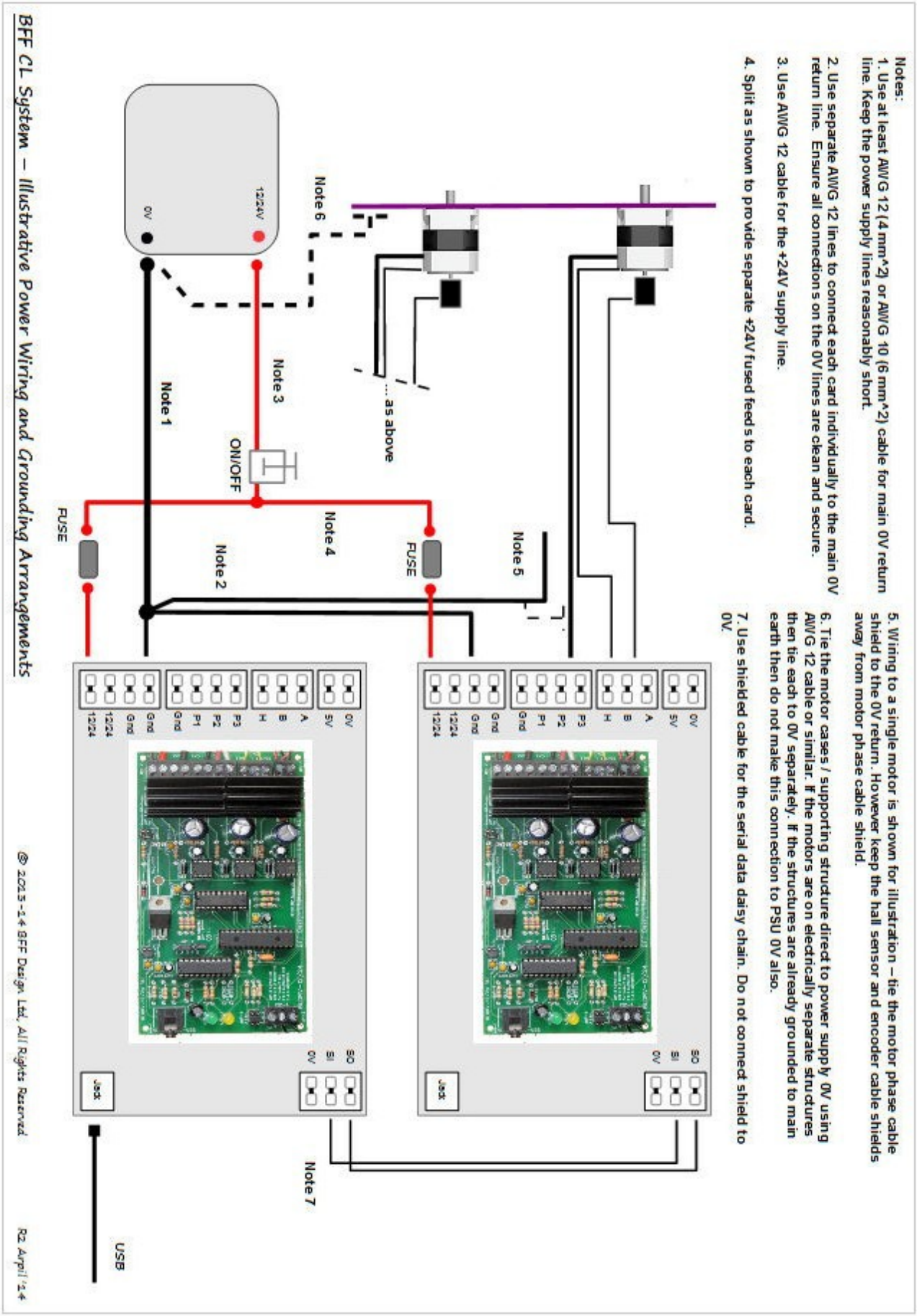

1/15 – V1.4 - added additional notes on the serial daisy chain wiring length and cable type.

4/14 – V1.3 - updated power wiring and grounding diagram – section 10 – adjusted small signal shield connections & notes.

9/13 – V1.2 - added power wiring and grounding diagram – section 10

8/13 – V1.1 - added additional information on grounding of the cards and motor cases to section 3 and the wiring diagram notes.

4/6/13 – V1.0 - updated for card R1.3. Updated for “potentiometer-less” system wiring and operation.

18/4/12 – V0.5 - added notes on power supplies, corrected web links.

3/9/11 – V0.4 - added wiring notes references to trim buttons.

- added comments on vibration scaling adjustment in the 20X2 programming.

4/8/11 - V0.3 – altered power supply and jumper related text in section 3. Added cooling section. Amended wiring diag and notes. Added firmware update procedure - Appendix 1

17/6/11 - V0.2 – corrected text in section 4

 © 2011-15, BFF Design Ltd – All Rights Reserved

Appendix 1 – Updating the Picaxe 20X2 firmware

The firmware on the BLDRV-12/24's onboard 20 pin 20X2 IC can be updated in-situ. Check the builtforfun web site for information on current firmware status or contact me for the latest updates.

The 20X2 is the socket mounted chip closest to the green and yellow LED's.

PROCEDURE

1. Download and install the free PICAXE Programming Editor software from the PICAXE web site here - http://www.picaxe.com/Software/PICAXE/PICAXE-Programming-Editor/
2. Power-down the BLDRV-12/24 cards and close any BFF CL software that is running.
3. Run the Programming Editor software. In **Options-Serial Port** set the COM port for your AXE027 USB download cable. In **Options-Mode** select “PICAXE-20X2”.
4. Select **Open** and load the .bas file for the firmware update. Do not alter the file contents in any way.
5. Disable the power input to any BLDRV-12/24 cards not being updated by disconnecting their 12/24V power-in connections.
6. On the BLDRV-12/24 card to be updated carefully remove the 28 pin dsPIC socket mounted chip – note its orientation, it will need to be re-fitted correctly when the process is complete. The dsPIC IC is the long 28 pin chip next to the 20X2. Removal of the chip will ensure the motor drive is disabled during the update.
7. Set JMP-2 to “Mode 2 Ops” for re-programming - pins 1 & 2 connected and pins 4 & 5 connected.
8. Power-up the card. It should now be the ONLY card powered and the green LED should flash continuously.
9. In the Programming Editor software click the **Program** button to download the new firmware to the 20X2. The software will indicate progress and completion.
10. Once programming is finished power-down the card and close the Programming Editor.
11. Return JMP-2 to “Normal” ops - pins 2 & 3 connected, all other pins open.
12. Carefully refit the 28 pin dsPIC IC in its socket – make sure it is in its original correct orientation.
13. Return JMP-3 and JMP-4 jumpers on any disabled cards to their original settings (make sure both jumpers are set correctly for the supply voltage).
14. If required repeat the process for any other cards, otherwise the updated cards are now ready for use.

NOTE:

DO NOT update a card when others are still powered-up.

DO NOT leave JMP-2 in programming mode.

DO NOT fit the 28 pin dsPIC IC in the wrong orientation. Pin 1 is marked by a dot – the dot should be at the JMP-2 end of the chip socket.

DO return JMP-3 and JMP-4 to the correct settings on any disabled cards.