BFF DIY Control Loader System – System Wiring with Brushless Drives

Note – PLEASE READ IN CONJUNCTION WITH ACCOMPANYING NOTES

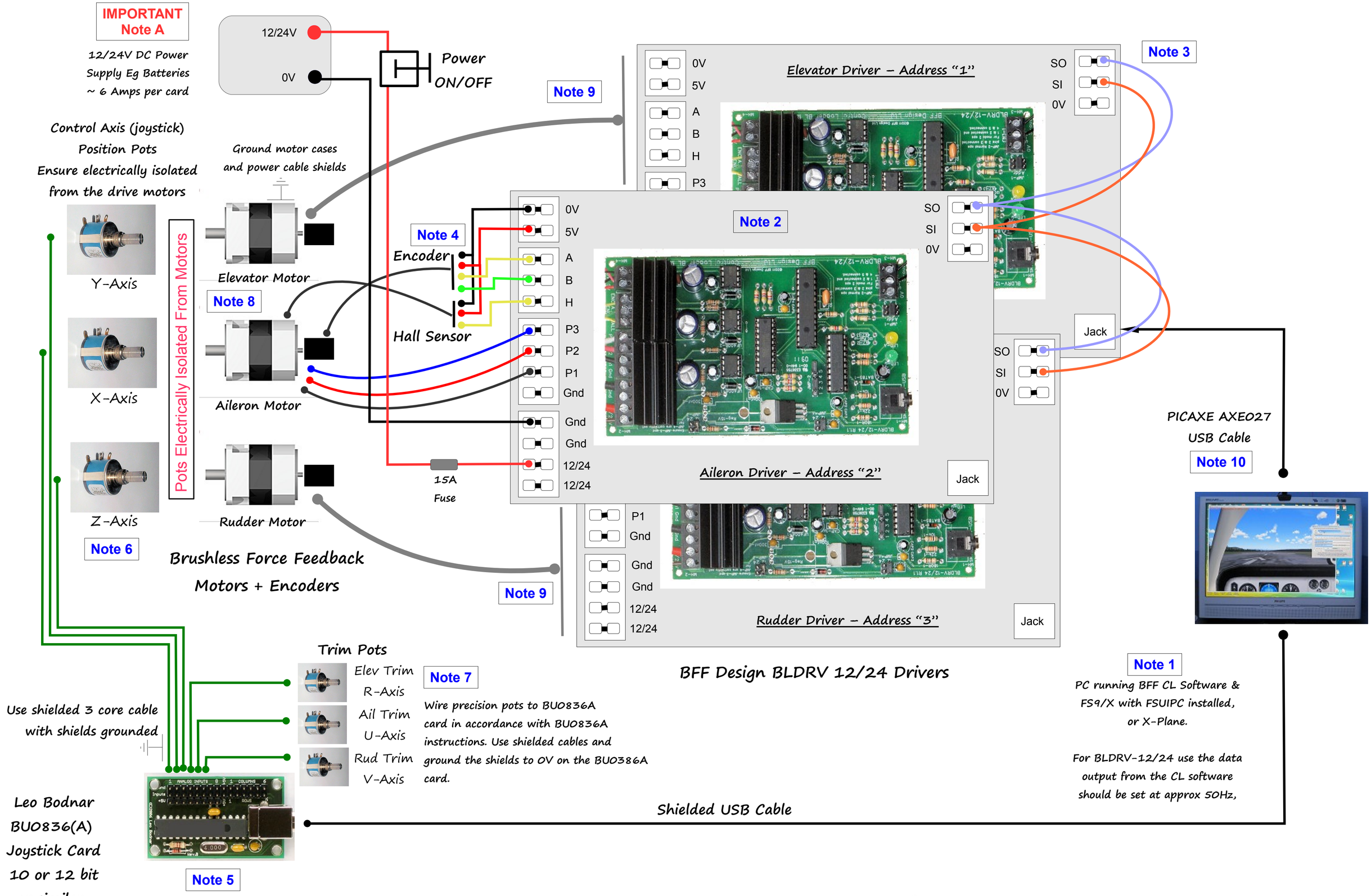

© 2010-11 BFF Design Ltd, All Rights Reserved

Sept '11