DIY Motion Cockpit – Overall Control & Drive System Wiring
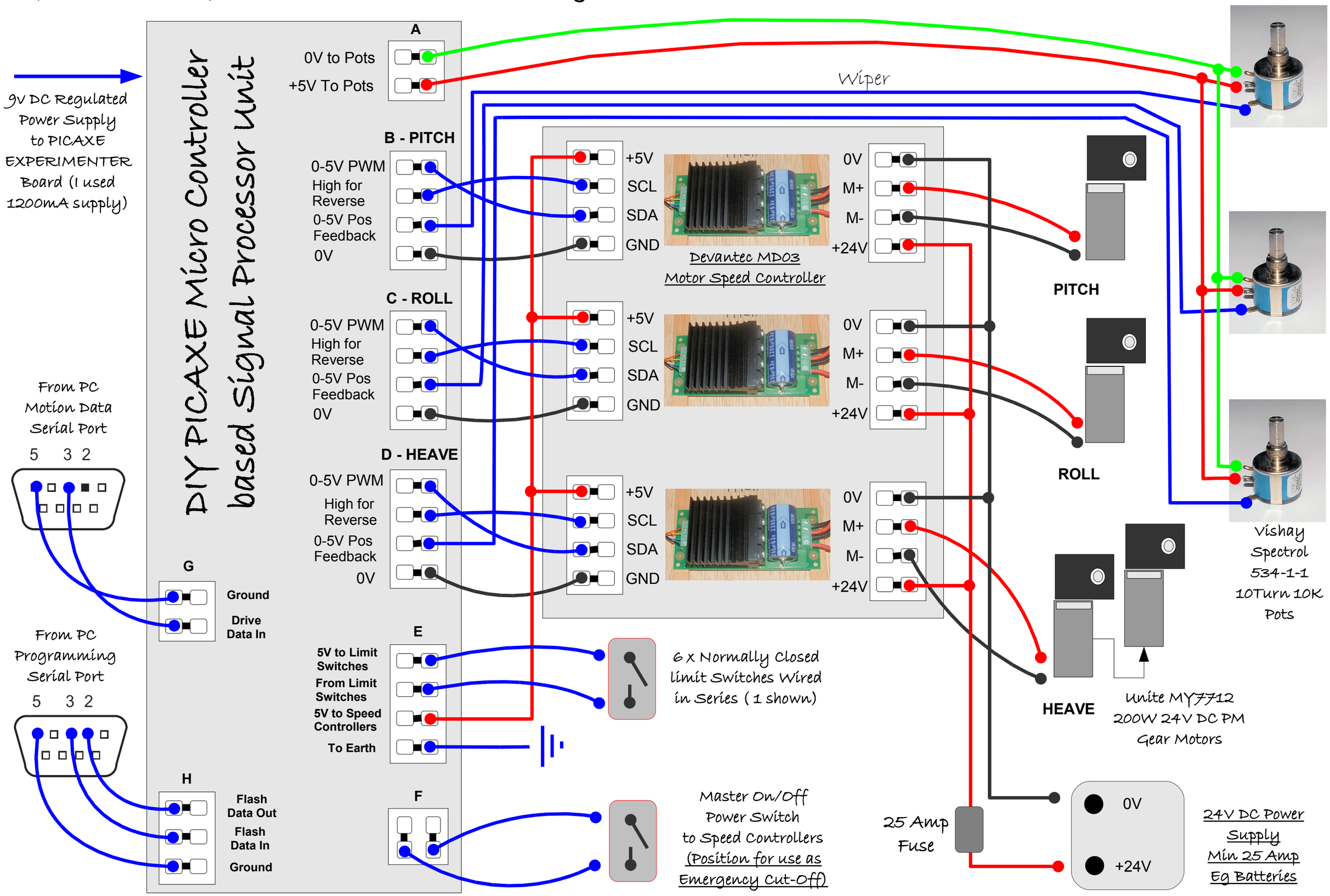
© 2007 BFF Design Ltd, All Rights Reserved