DIY Motion Platform Illustrative System Wiring – With Dimension Engineering SaberTooth x 25 / SyRen 25 Controllers

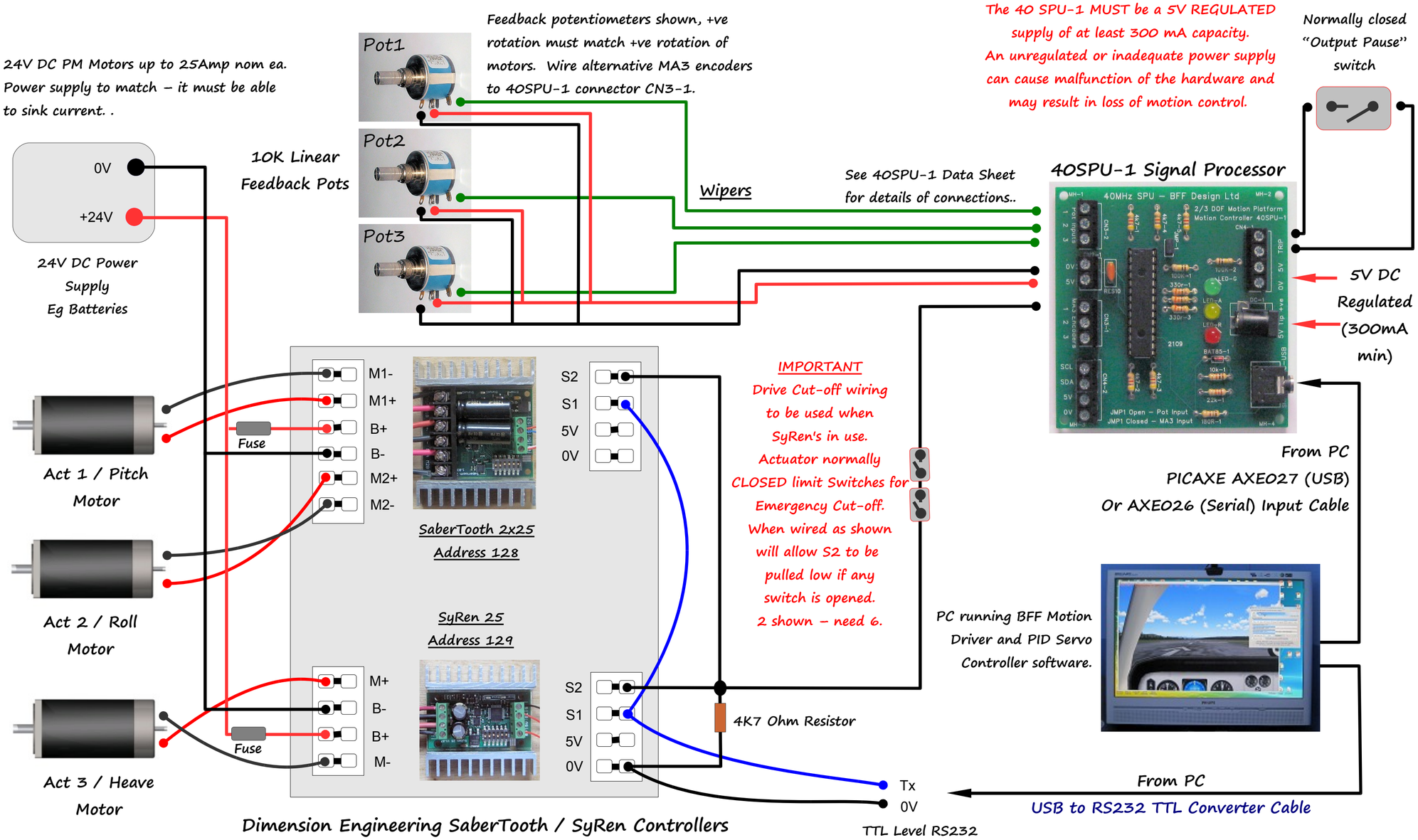

Dimension Engineering SaberTooth / SyRen Controllers
Shown is 3 DOF arrangement using one Sabertooth 2x25 and one SyRen 25 controller.

© 2009-10 BFF Design Ltd, All Rights Reserved Feb '10